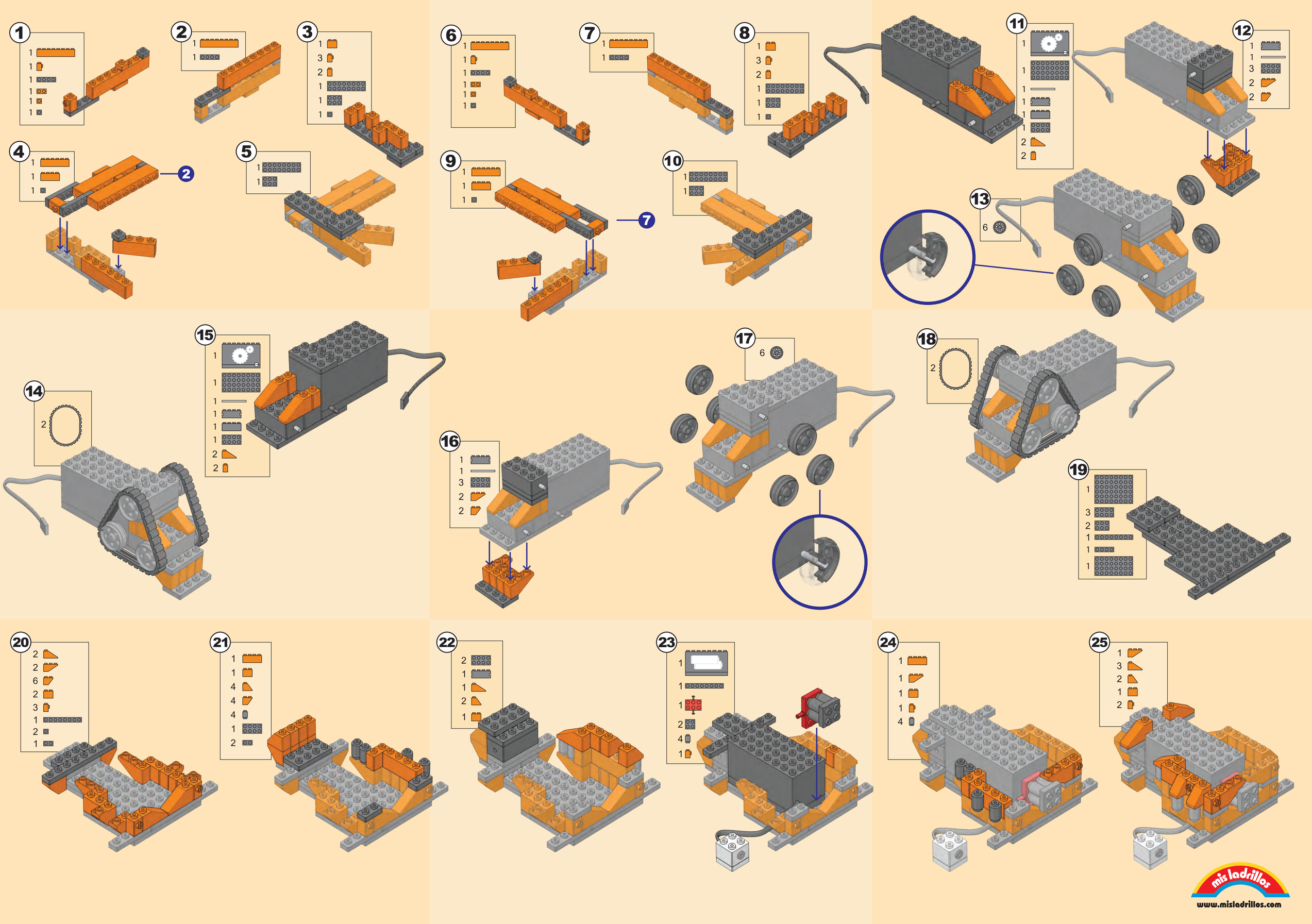
1
1 1 1 1 1
2
1 1
3
1 3 2 1 1 1
4
1 1 1
2
5
1 1
6
1 1 1 1 1
7
1 1
8
1 3 2 1 1 1
9
1 1 1
7
10
1 1
11
1 1 1 1 1 1 2 2
12
1 1 3 2 2
13
6
14
2
15
1 1 1 1 1 1 2 2
16
1 1 3 2 2
17
6
18
2
19
1 3 2 1 1 1
20
2 2 6 2 3 1 2 1
21
1 1 4 4 4 1 2
22
2 1 1 2 1
23
1 1 1 2 4 1
24
1 1 1 1 4
25
1 3 2 1 2
mis ladrillos
www.misladrillos.com

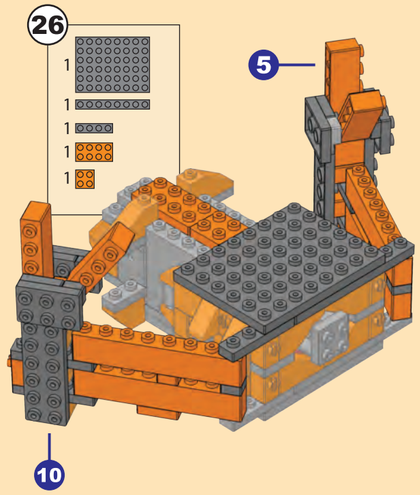

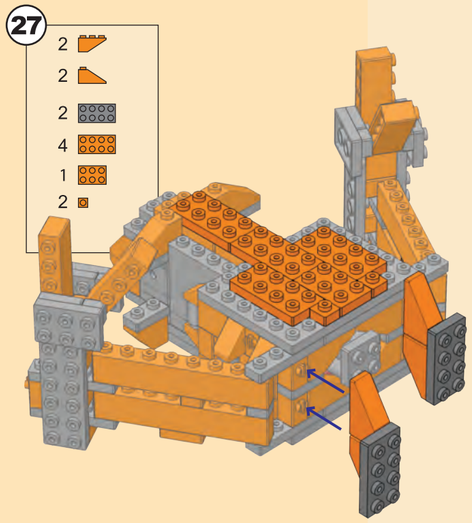

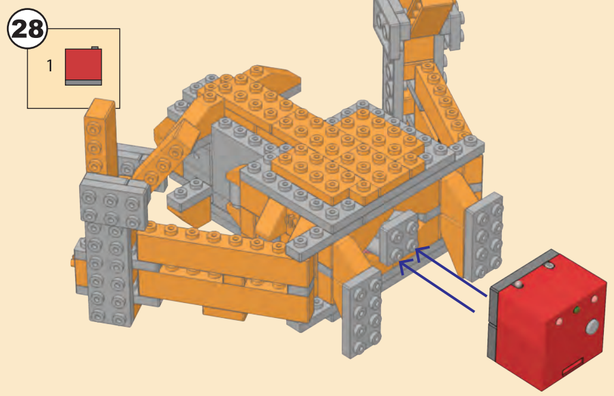

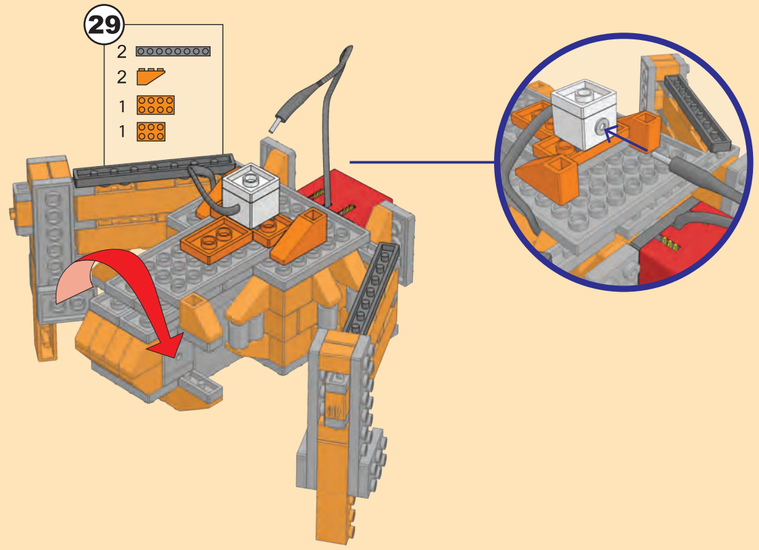

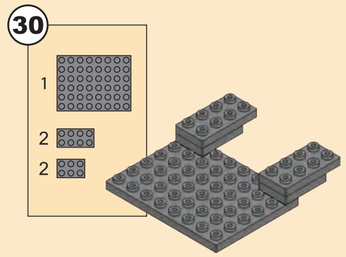

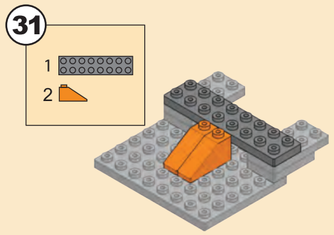

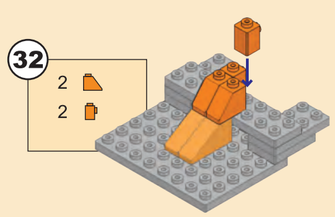

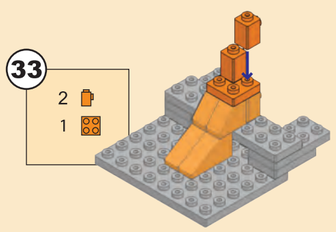

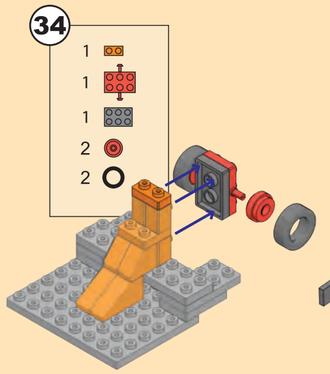

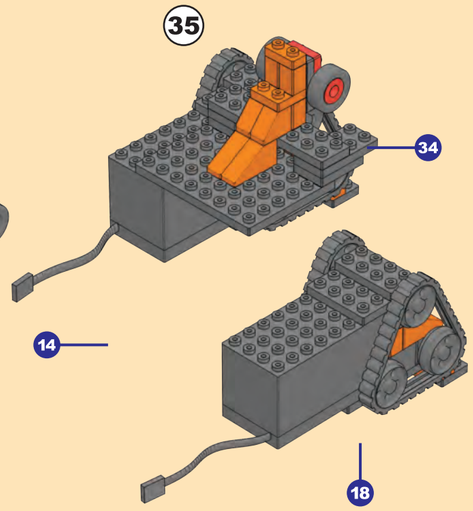

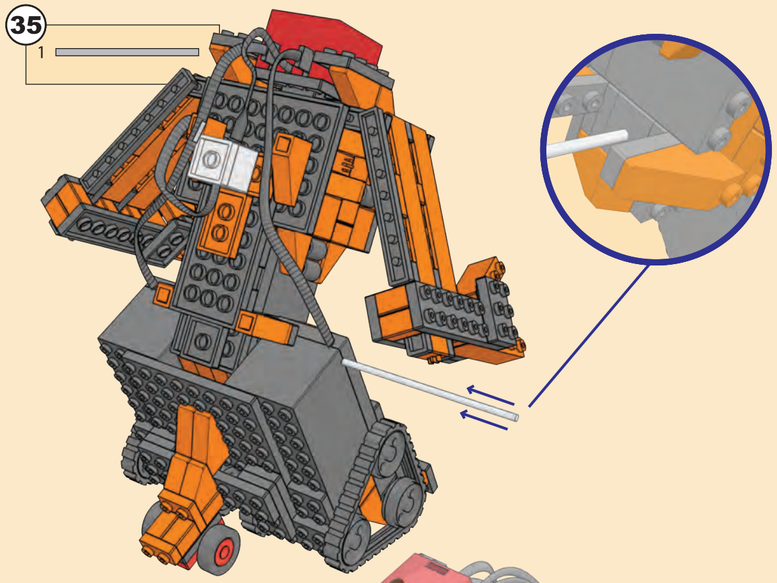

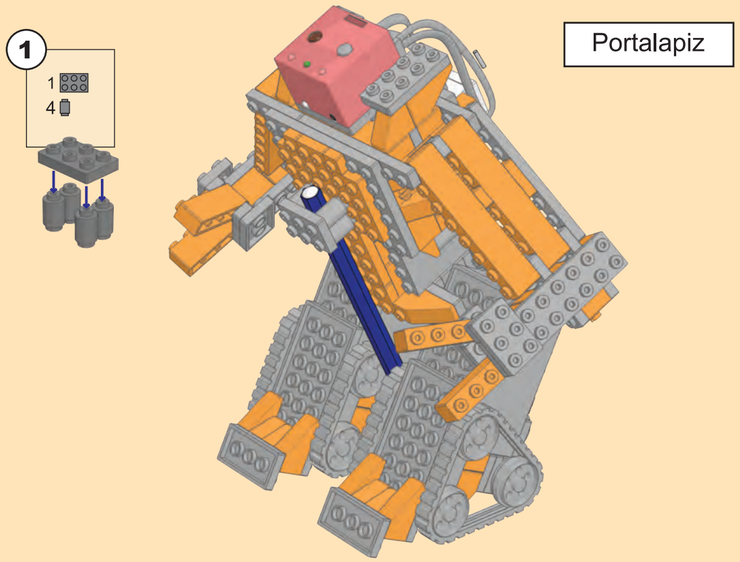

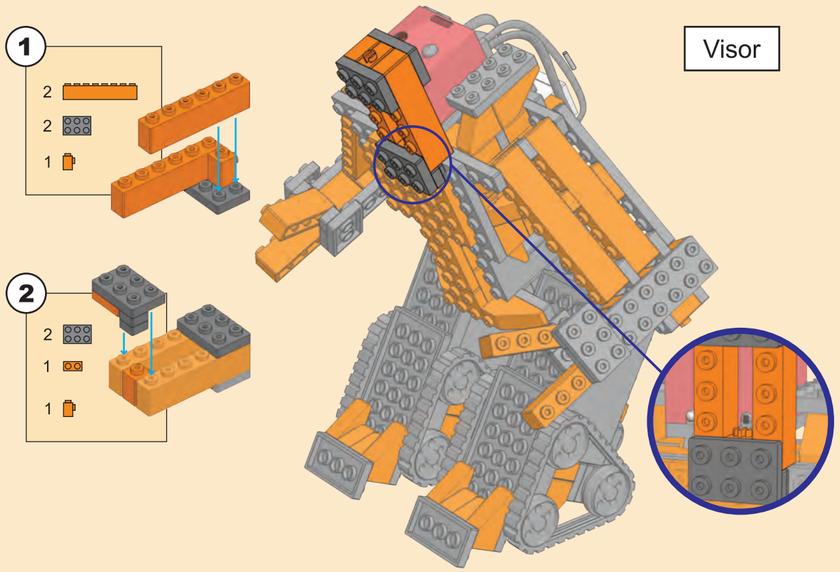

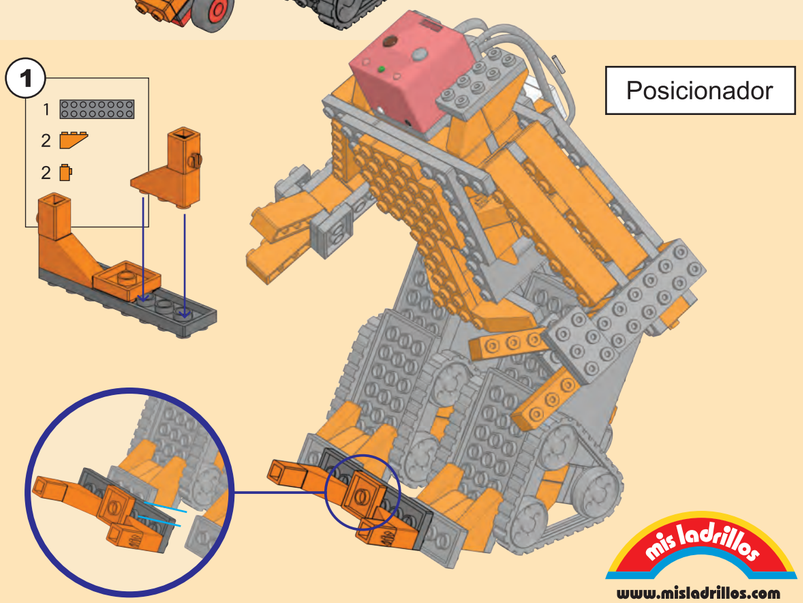

mis ladrillos
www.misladrillos.com